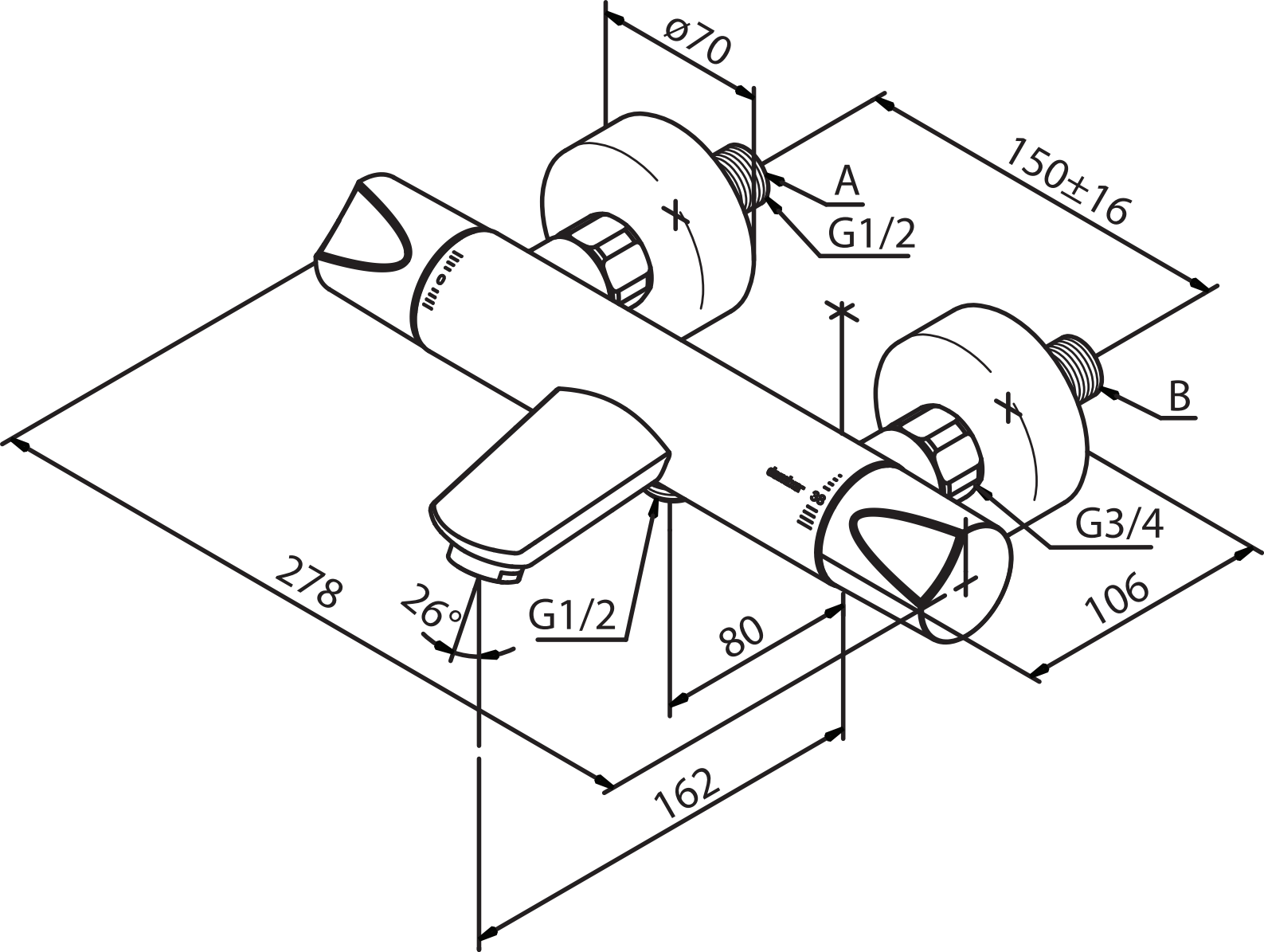
ø70
150±16
A
G1/2
B
G3/4
278
26°
G1/2
80
106
162